Agilent Thermocouple and ConvecTorr Gauge Simulators – Rough Vacuum

TC Gauge Simulator

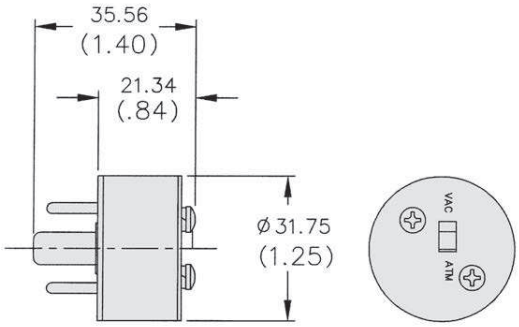

ConvecTorr Simulator

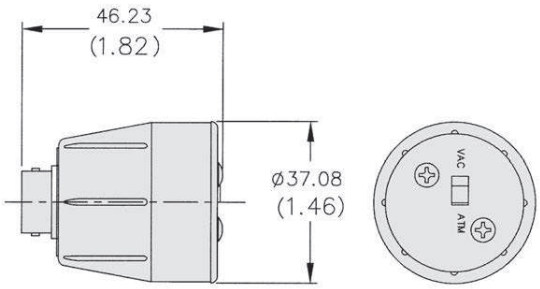

Dimensions: millimeters (inches)

ConvecTorr and TC Gauge Simulators are designed to be convenient tools for verifying proper operation of the control unit. For those cases when the target gauge tube cannot be brought to proper pressure levels for true in-situ calibration, the simulator is used to ensure the control unit is calibrated to the average tube. The selectable "Vac" or "Atm" setting facilitates troubleshooting.

Technical Specifications

Reference pressure
Simulates high vacuum <10^{-4} Torr and atmosphere 760 Torr

Ordering Information

Description	**Part Number**	**Shipping Weight** kg (lbs.)
ConvecTorr Simulator	L7382301	0.5 (1.0)
TC Simulator	L7383301	0.5 (1.0)